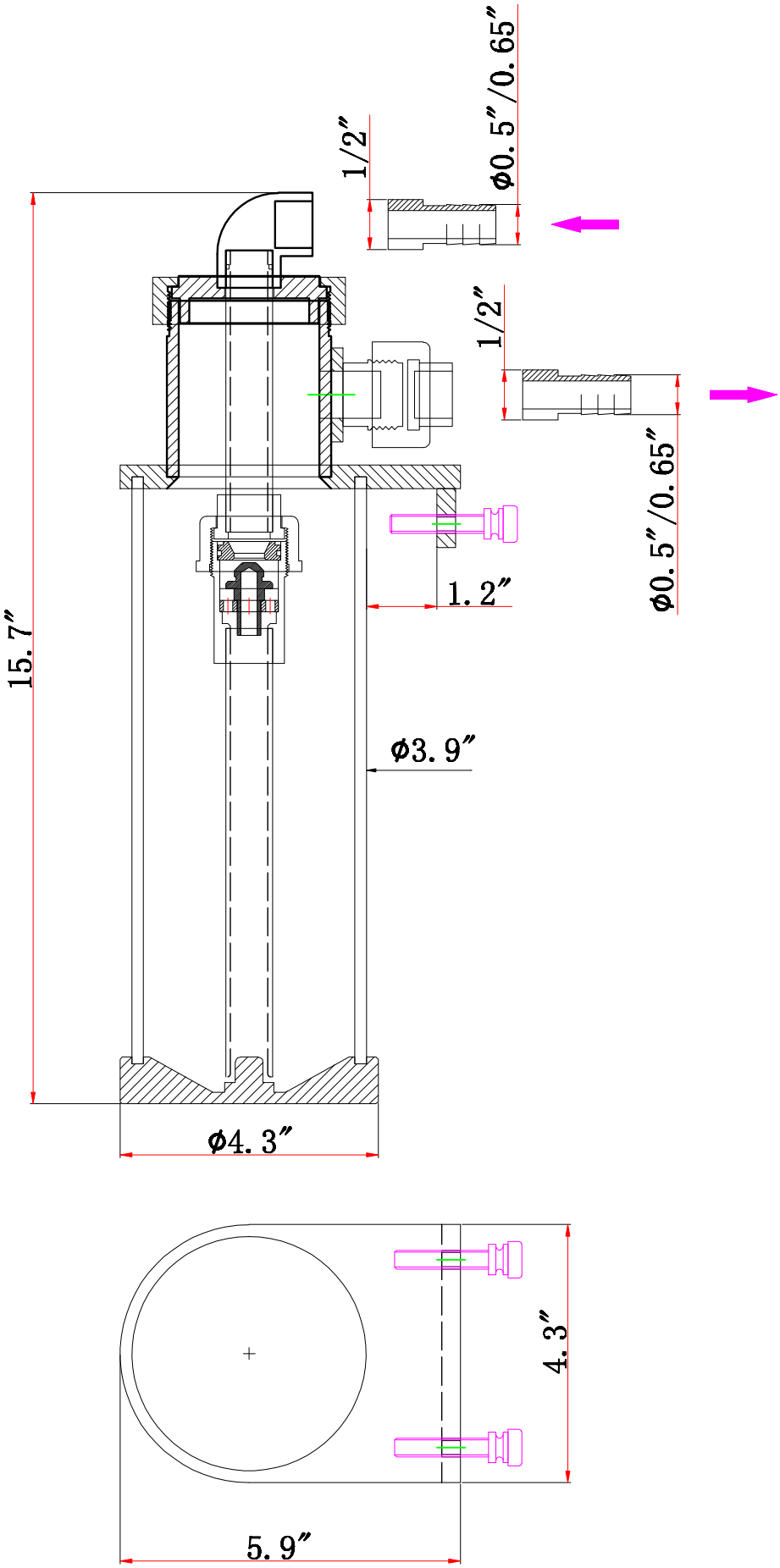

BRH-MF-100